[ENG] NetPing IO v2, User guide

Содержание

[ENG] [IOv2] Introduction

This user guide will help to learn the operating peculiarities of the **NetPing IO v2** device, get an idea about its features and technical specifications, and prepare a device for the operation.

The user guide is designed for network administrators as well as users, who are installing or servicing the device. To work with a device, a user has to have an idea about the principles of building and operating local networks, as well as acquire the next knowledge and skills:

- Basic knowledge in local and global networks;
- Basic knowledge in architecture and operation principles of TCP/IP networks;
- Basic knowledge in architecture and operation principles of Ethernet networks.

[ENG] [IOv2] Liability and Copyright

Developer and manufacturer:

NetPing east Co Ltd.

[ENG] [IOv2] Connectors and Indicators

A front panel of a NetPing IO v2 device is represented on the picture below:

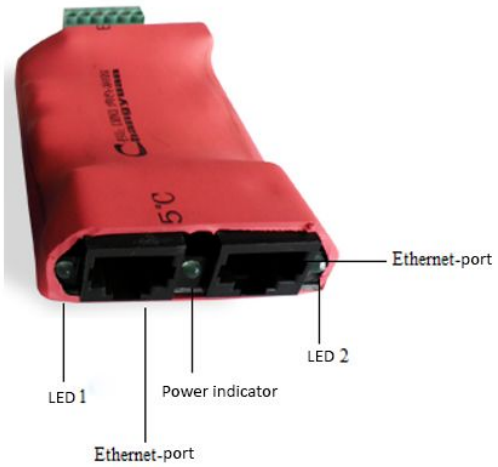

On a front panel of a device, there are 2 Ethernet 10/100-BASE-TX sockets. A device can be connected to the Ethernet network using any of these connectors. The second connector may be used for plugging any network devices, including other NetPing devices.

Operation modes of a power indicator

Event	Indication
Turning a device on.	LED blinks several times. A number of blinks depend on a length of a starting procedure and may be different for different firmware versions. Blinking does not continue more than 2 seconds and is continued until a device is internally initialized. If blinking continues for more than 2 seconds, this means that parameters of a device are reset to default values at the start (see below in this table).
A device is turned on, there is no activity.	LED lights continuously.
A device transmitted a package	LED blinks once for very transmitted package.
Firmware of a device is updated.	Firmware of a device is updated in two stages: 1. During the first stage, firmware is uploaded to a device. LED blinks in a standard indication mode for receiving packages. 2. During the second stage, firmware is updated in a device. LED blinks rapidly during this process. After firmware updating, a device is rebooted. LED operates in the mode that corresponds to turning a device on.

Event	Indication
Parameters of a device are reset to default values.	LED blinks during the entire process of resetting values of parameters (5-10 seconds).

LEDs 1 and 2 correspond to Eternet-ports 1 and 2 respectively. If the Ethernet connection is established on the Ethernet-port 1, LED 1 is active, if it is established on the port 2, then LED 2 is active.

Operation modes of LED 1 and LED 2

Event	Indication
Turning on a device.	LED lights only when a connection is established on a corresponding Ethernet port.
A device is turned on, there is no activity on a device.	LED lights continuously while a connection is established on a corresponding Ethernet port.
A device received a package.	LED blinks once for each received package.

Back panel of a NetPing IO v2 device is shown on the picture below:

1 – +U (power), 2 - +U (power), 3 – GND (ground), 4 – IO 1 (input/output1), 5 – IO 2 (input/output2), 6 – IO 3 (input/output3), 7 – IO 4 (input/output4), 8 – +3V3, 9 – GND (ground)

Between terminals, there is a jumper for resetting parameters of a device to default values. More detailed information can be found in the section "Resetting parameters of a device to default values"

+U – power voltage of a device +12V. The second contact +U is used to power connected sensors.

IO1 ... IO4 – are input/output lines for connecting external sensors and executive mechanisms. Each line may be configured individually as an input or an output.

[ENG] [IOv2] Installation and Connection

To connect a device:

1. Unpack a device;
2. Connect necessary sensors (see the section "Plugging sensors");
3. Insert wires in necessary connectors and tie them up with a screw;
4. Plug a standard power supply unit of a device to power connectors, by using an adapter for NetPing IO v2. Plug a red wire of an adapter into an output 1, and a black wire into an output 3;

5. Insert a power supply unit to an electric outlet. A power indicator will light up;

6. Insert an Ethernet cable into any Ethernet port of a device, plug it to a switch or directly to a network card of a computer;
7. LED will light up that is located near the Ethernet port that is connected. When transmitting packages LED will blink from time to time;

8. A default IP-address of a device is 192.168.0.100. To perform the initial configuration of a device make sure that the address of your computer is in the same IP sub network with a device address. For example, the address of a computer may be: 192.168.0.11 mask: 255.255.255.0.;

9. To perform an initial configuration of parameters of a device using a web interface, make sure that a device responds to a command ping its IP address;

```
C:\>ping 192.168.0.100

Pinging 192.168.0.100: with 32 bytes of data:
Reply from 192.168.0.100:  bytes=32 time<1ms TTL=128
Reply from 192.168.0.100:  bytes=32 time<1ms TTL=128
Reply from 192.168.0.100:  bytes=32 time<1ms TTL=128
Reply from 192.168.0.100:  bytes=32 time<1ms TTL=128

Ping statistics for 192.168.0.100:
    Packets: Sent = 4, Received = 4, Lost = 0 (0% loss),
Approximate round trip times in milli-seconds:
    Minimum = 0ms, Maximum =  0ms, Average = 0ms
```

10. To configure a device, go to a web interface of a device via the address http://192.168.0.100 using a browser (it is desirable to use a browser Google Chrome of the latest version). To get authorized, use the next credentials:

- **Login:** visor
- **Password:** ping

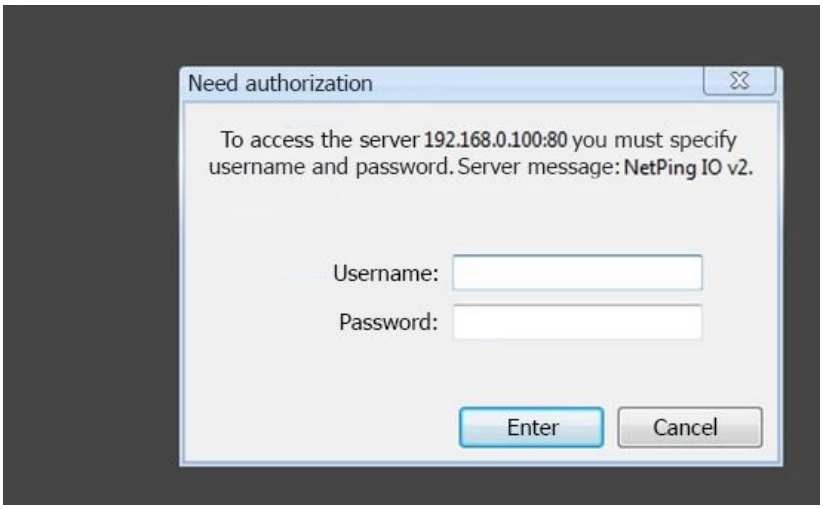

A further configuration of a device is performed in a web interface of a device.

> *Important! A description of a device web-interface can be found in a separate document DKSF 253.X IU, where X – is a firmware number of a device, to which a description is applicable.*

[ENG] [IOv2] Operating and Storage Conditions

A device is designed for continuous round the clock operation indoors. In operating conditions of use, a device is resistant to an environment with temperature in a range of 0°C - +40°C (32 – 104 degrees Fahrenheit) and relative humidity in a range of 5% - 95 % at 25°C (77 degrees Fahrenheit) without moisture condensation. A device should be protected from direct moisture and direct sun light.

A construction of a device provides a reliable uninterrupted work during a long period of time without maintenance. Highly developed functionality of remote setting and configuration of a device allows changing any parameters remotely and centrally for the most of the devices.

Devices should be stored in a temperature range between - 40°C and +70°C.

In rooms for keeping a device, a content of dust, acid and alkali gases, aggressive gases and other harmful impurities causing corrosion, should not exceed a content of corrosion-active agents for atmosphere of type 1.

Important! A device must be connected to a power supply socket with a grounding contact or a hole, where a contact, located at an outlet and connected to a ground wire, is inserted. Grounding must be performed according to the State Standard P 50571.21-2000. An infraction of this rule is a violation of a device operation conditions and may be dangerous to human lives as well as damage other devices!

[ENG] [IOv2] Using IO Lines to Control External Devices (in an «output» mode)

Input-Output (IO) lines of a device can be used for an input work as well as in an output mode for managing external devices.

A device has four IO lines, corresponding to contacts I1 – I4 of a terminal block. Lines configuration for work as an input or an output is made through a controlling web-interface of a device. All four IO lines can be customized independently.

Lines management can be done by SNMP commands, URL-encoded commands, via a web-interface or using SMS-commands (for devices with built-in GSM modem).

Such device functions as a watchdog and scheduled load management are NOT AVAILABLE for IO in an output mode.

Examples of using:

- Remote servers reboot – an imitation of pressing “reset”;
- Remote management of an alarm, a light, a fan;
- Management of an electric lock, electric gates on a remote object;
- Management of smart home elements - watering flowers, opening-closing louvers, water pump, heating boiler, heaters, etc.
- Remote management of a power installation (diesel generator, gasoline).

Important! Correct electrical coordination of IO lines is required when connecting external executive devices.

Important! IO lines do not have galvanic isolation with a device! Remember about electrical safety when using relays that commutate 220 V circuits. All work must be done by specialists with a correspondent qualification who have a permit to work with such a voltage!

It is acceptable to use intermediate relays with a power supply voltage 12 V from an external source. A ready socket can be used for IO lines connection NetPing AC/DIN socket. In addition, we can advise ready assembly relays of other manufacturers, which can be connected to our devices:

- BM8070D a power relay 16A/250V for DIN-rail (check out the compatibility of this relay with the NetPing device model on the relay web page on the site);
- MP701 a power module switch (4 independent channels, 2 kW 10A each) (check out the compatibility of this relay with the NetPing device model on the relay web page on the site);

For more detailed information, please contact a technical support support@netpingdevice.com.

Electrical Parameters of IO Lines

In the «output» mode:

- the voltage of logic «1»: +3 V, resistance: 3,3 kOhm;
- the voltage of logic «0»: 0 V, 500 mA.

В режиме «вход»:

- voltage of logic «1»: > 2 V;
- voltage of logic «0»: < 0,8 V.

Equivalent Circuit

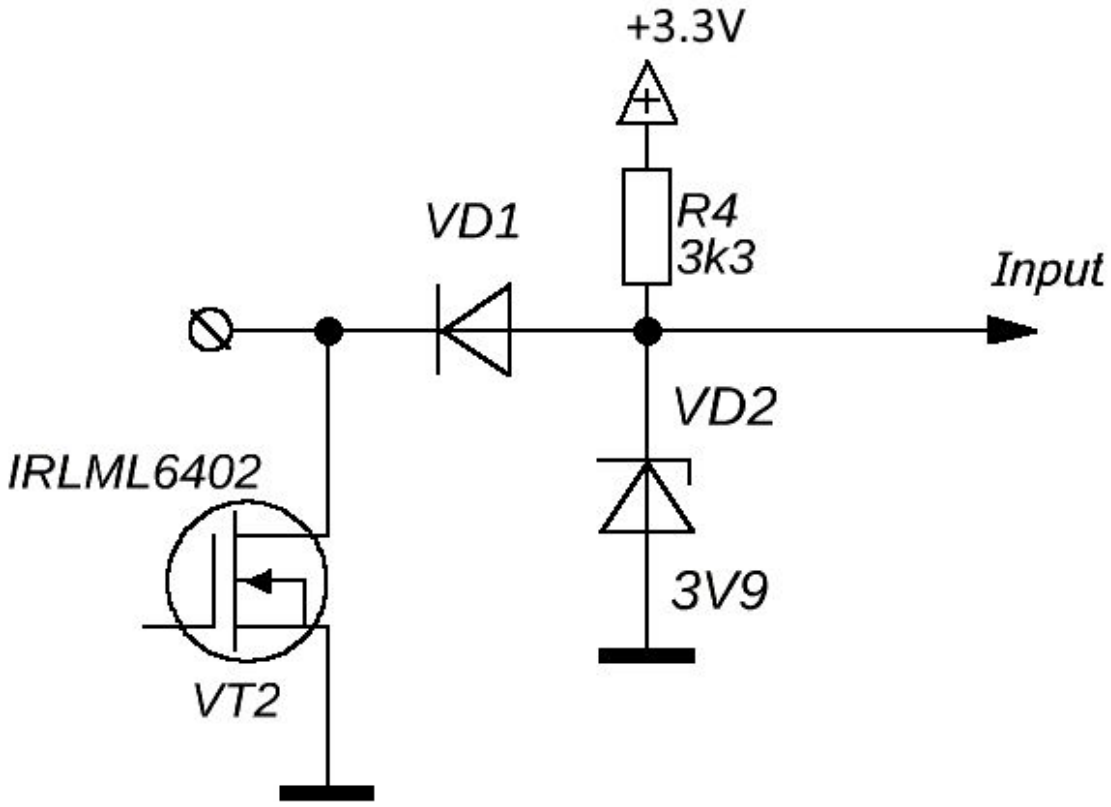

[ENG] [IOv2] Plugging Sensors

It is prohibited to plug sensors and external modules into NetPing devices when a power supply is on!

Plugging a Door Sensor

A sensor is a «reed contact», therefore the order of connecting wires does not matter.

Loop	NetPing IO v2 Terminal
First wire	One of IO lines – 1 - 4
Second wire	GND

A sensor will be displayed in a device interface as a status of an IO line, to which it is connected.

Important! A corresponding IO line must be switched to an “input” mode in settings of a device.

A sensor is packaged with an inseparable cable, with connectors on the ends. A cable length can be increased with the help of flat cable extenders of RC-4 sensor, which are sequentially plugged one into another. Or it can be done independently with the help of any wire with a minimum cross section of 0,4 mm^2. Maximum allowable length of a flat cable is 100 m.

Plugging Shock Sensor PI-90d

A shock sensor is connected by a four-wire line according to the table below:

Loop Color	Contact Name
Blue (an output of a zone of light shocks and vibration)	One of IO lines – 1 - 8
Green (an output of a zone of hard shocks)	One of IO lines – 1 - 8
Red	+U
Black	GND

On a body of a sensor body, there are LED indicators, sensitivity adjustment screw and a socket for plugging wires. A corresponding zone will be displayed in a device interface as a status of an IO line, to which it is connected. To adjust a sensitivity of a sensor, a sensitivity adjustment screw is used. Turning a screw clockwise leads to increasing of a sensitivity, while turning it counterclockwise leads to decreasing of a sensitivity. When a sensor registers a shock, a status of a line of a light shock zone and a hard shock zone is switched to a low level for short time only, therefore there is a need to use a mechanism of sending SNMP TRAP notifications by a NetPing IO v2 device.

Important! Corresponding IO lines must be set to an “input” mode in settings of a device.

A sensor is packaged with an inseparable cable, with connectors on the ends. A cable length can be increased with the help of flat cable extenders of RC-4 sensor, which are sequentially plugged one into another. Or it can be done

independently with the help of any wire with a minimum cross section of 0,4 mm^2. Maximum allowable length of a flat cable is 100 m.

Plugging a Glass Breaking Sensor

Surface security sound detector «Glass-3» is designed to detect breaking glass sheets. A sensor announces alarm by opening contacts of executive relay. A detector has a possibility to adjust sensitivity, to choose an operating algorithm, light LED indication of a status of a detector with a possibility to switch indication off.

To plug a sensor, there is a need to connect:

Flat Cable	Contact Name
Labelled (red) wire	+U
First wire after a labelled one	GND
Second wire after a labelled one	GND
Third wire after a labeled one	One of IO lines – 1 - 4

Each sensor will be displayed in a device interface as a status of an IO line to which it is connected.

Important! A corresponding IO line must be switched to an “input” mode in settings of a device.

A sensor is packaged with an inseparable cable, with connectors on the ends. A cable length can be increased with the help of flat cable extenders of RC-4 sensor, which are sequentially plugged one into another. Or it can be done independently with the help of any wire with a minimum cross section of 0,4 mm^2. Maximum allowable length of a flat cable is 100 m.

Connecting Motion Sensor SWAN-QUAD

To plug a sensor, there is a need to connect:

Colored Cable	Flat Cable	Contact Name
Green	Labelled (red) wire	One of IO lines – 1 - 4
White	First wire after a labelled one	GND
Black	Second wire after a labelled one	GND
Red	Third wire after a labelled one	+U

Every sensor will be displayed in a device interface as a status of an IO line, to which it is connected.

Important! A corresponding IO line must be set to an “input” mode in settings of a device.

A sensor is packaged with an inseparable cable, with connectors on the ends. A cable length can be increased with the help of flat cable extenders of RC-4 sensor, which are sequentially plugged one into another. Or it can be done

independently with the help of any wire with a minimum cross section of 0,4 mm^2. Maximum allowable length of a flat cable is 100 m.

Connecting Leakage Sensor H2O

To plug a sensor, there is a need to connect:

Colored Cable	Contact Name
Green	One of IO lines – 1 - 4
Yellow	GND
Brown	+U
White	GND

Every sensor will be displayed in a device interface as a status of an IO line, to which it is connected.

Important! A corresponding IO line must be set to an “input” mode in settings of a device.

A sensor is packaged with an inseparable cable, with connectors on the ends. A cable length can be increased with the help of flat cable extenders of RC-4 sensor, which are sequentially plugged one into another. Or it can be done independently with the help of any wire with a minimum cross section of 0,4 mm^2. Maximum allowable length of a flat cable is 100 m.

Plugging Leakage Sensor, Model 2605

To plug a sensor, there is a need to connect:

Colored Cable	Contact Name
Green	One of IO lines – 1 - 4
Yellow/White	GND
Red	+U
Black	GND

Every sensor will be displayed in a device interface as a status of an IO line, to which it is connected.

Important! Corresponding IO line must be set to an “input” mode in settings of a device.

A sensor is packaged with an inseparable cable, with connectors on the ends. A cable length can be increased with the help of flat cable extenders of RC-4 sensor, which are sequentially plugged one into another. Or it can be done independently with the help of any wire with a minimum cross section of 0,4 mm^2. Maximum allowable length of a flat cable is 100 m.

Plugging 220V Occurrence Sensor

A sensor is a «dry contact», therefore an order of connecting wires does not matter.

Contact Name
One of IO Lines – 1 - 4
GND

A sensor will be displayed in a device interface as a status of an IO line to which it is connected.

Important! A corresponding IO line must be set to an “input” mode in settings of a device.

A sensor is packaged with an inseparable cable, with connectors on the ends. A cable length can be increased with the help of flat cable extenders of RC-4 sensor, which are sequentially plugged one into another. Or it can be done independently with the help of any wire with a minimum cross section of 0,4 mm^2. Maximum allowable length of a flat cable is 100 m.

Plugging NetPing AC/DIN Sockets

A number of connected NetPing AC/DIN sockets is limited only by a number of available IO lines.

When plugging a socket to a device, all wires are used except for a brown (white) one. An IO line, to which a NetPing AC/DIN socket is connected, needs to be switched to a status «output». When a status is a «logic 0», and 220V is present on an IO line in a socket, the load will be switched on. When a status is «logic 1», and there is no voltage on an IO line in a socket, the load will be switched off.

Important! A brown (white) wire is not used and must stay unplugged!

Cable	Contact Name
Red	+U
Black	GND
Blue (green)	One of IO lines – 1 - 4

Plugging a Buzzer Buzzer (mod.STD-3025)

Plugging to an IO line with the use of +12V:

Colored Loop	NetPing IO v2 Terminal
White	One of IO lines – 1 - 4

Colored Loop	NetPing IO v2 Terminal
Red	+U (+12V)

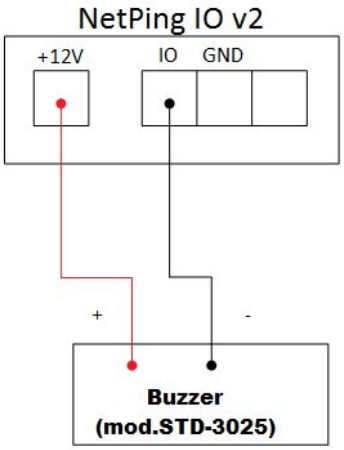

Important! Corresponding IO line must be set to an “input” mode in settings of a device.

A sensor is packaged with an inseparable cable, with connectors on the ends. A cable length can be increased with the help of flat cable extenders of RC-4 sensor, which are sequentially plugged one into another. Or it can be done independently with the help of any wire with a minimum cross section of 0,4 mm^2. Maximum allowable length of a flat cable is 100 m.

[ENG] [IOv2] Resetting Parameters to Default Values

To reset parameters to default values, perform the next actions:

- Power off a device;
- Install a jumper;
- Switch power on;
- Remove a jumper 5-10 seconds after switching power on.

If a procedure is performed successfully, a LED light will blink initiating reset of parameters.

On default, the next parameters of a device are set:
User name: **visor**
Password: **ping**
IP address: **192.168.0.100**
Subnetwork mask: **255.255.255.0**
Gateway: **not set**
SNMPcommunity: **SWITCH**
MAC-address: **00 a2 xx xx xx xx**
Here xx xx xx xx corresponds to a serial number of a device. Thus, all devices after being manufactured have unique MAC-addresses.

After resetting parameters to default settings there is a need to do an initial configuration of a device.

[ENG] [IOv2] Warranty

The manufacturer guarantees normal operation of the product within 24 months from the date specified on the warranty sticker if a buyer follows operating and storage conditions. Manufacturer warranty applies only to failure of a device which occurred because of defects in manufacturing process of products and components used. If during a warranty period the manufacturer receives a notice of such defects, it will repair or exchange the product (by its own discretion). If the manufacturer is unable to repair or replace a flawed item during a period of time determined by the current legislation, the manufacturer according to a customer's wish can return the amount paid for the product at the time of purchase. The manufacturer provides a limited warranty on firmware and device configuration software. In case of detecting any errors in the software which became known to the manufacturer on its own or from a customer, the manufacturer will fix these errors within a reasonable time and provide an update for the customer. Only the errors that block normal use of the device at conditions and for performing functions described in this User Guide are a subject to mandatory fix. This warranty does not apply to cases when defects appear because of: a misuse of a device, any modifications of a device without a written permission of the manufacturer, opening up a device (a warranty sticker on the case of a device is damaged) except cases foreseen by this description; repairing by unauthorized personnel, using or storing a device out of the range of allowable temperature and humidity, pressure, a software modification, and the reasons, listed below:

- A device failed because of the problems in a public electric network, plugging a device into power supply networks with invalid parameters, absence of grounding, etc. (power fluctuations and surges, overloading, etc.);
- A device failed because of having liquid inside;
- A device failed as a result of extreme temperatures;
- A device failed because of mechanical damage;
- A device failed because of connecting a power supply unit with invalid output voltage or a defective power supply unit;
- There are foreign objects, insects, etc inside the enclosure;
- During operation a voltage bigger than an allowable voltage range by the Ethernet standard has been supplied to the ports of a device.

[ENG] [IOv2] Additional Documents and Links

A device webpage on a manufacturer's website is located at http://www.netpingdevice.com/products/netping-io-v2

Manufacturer's website: http://www.netpingdevice.com

Technical support contacts: http://www.netpingdevice.com/support

Phone: +886-2-23121582

E-mail: support@netpingdevice.com